APPENDIX A

Troubleshooting the Router

This appendix contains information about how to isolate problems with the router and includes the following sections:

- Isolating Problems
- Reading the LEDs

Isolating Problems

The key to problem solving in this system is to try to isolate the problem to a specific subsystem. By comparing what the system is doing to what it should be doing, the task of isolating the problem is greatly simplified.

When problem solving, consider the following subsystems:

- Power and cooling systems—The power supply, power cable, and fan
- Ports and cables—The ports on the rear panel of the router and the cables that connect to them

Troubleshooting the Power and Cooling Systems

Check the following items to help isolate the problem:

- When the power switch is in the ON position (|) and the System OK LED is ON, are the fans operating? If not, check the fans.
- Does the router shutdown after being ON a short time? Check the environmental conditions. The router might be overheating, resulting in a thermal-induced shutdown. Ensure that the chassis intake and exhaust vents are clear. Review the section "General Site Requirements" in the chapter "Preparing to Install the Router." The operating temperature for the router is 32 to 104° F (0 to 40°C).
- Does the router fail to boot, but the System OK LED is ON? Check the power supply.
- Does the router constantly or intermittently reboot? There might be a problem with the processor, the software, or a DRAM SIMM might be installed incorrectly.

For information about obtaining technical support, refer to the "Overview of the Router" chapter.

Troubleshooting the Ports, Cables, and Connections

Check the following items to help isolate the problem:

- Does the router not recognize a port? Check the cable connection.
- When the power switch is in the ON position (|), does the System OK LED light up? If not, check the power source and power cable.
- Does the system boot, but the console screen is frozen? Verify that the console is configured for 9600 baud, 8 data bits, no parity, and 2 stop bits.

For additional troubleshooting information, refer to the *System Error Messages* and *Debug Command Reference* publications (available on the documentation CD that came with the router or you can order printed copies).

For information about obtaining technical support, refer to the section"Obtaining Service and Support" in the "Overview of the Router " chapter.

Reading the LEDs

The LEDs indicate the current operating condition of the router. You can observe the LEDs, note any fault condition that the router is encountering, and then contact your system administrator or technical support, if necessary. For information about how to contact technical assistance, refer to the section “Obtaining Service and Support” in the chapter “Overview of the router.”

Figure A-1 shows the location of the LEDs on the rear panel of the routers. The power LED, at the right of the auxiliary port, lights up when the system is working properly. All of the other LEDs indicate activity by flickering. When there is heavy activity on a port, the LED might be ON constantly. If an LED is not ON when the port is active and the cable is connected correctly, there might be a problem with the port.
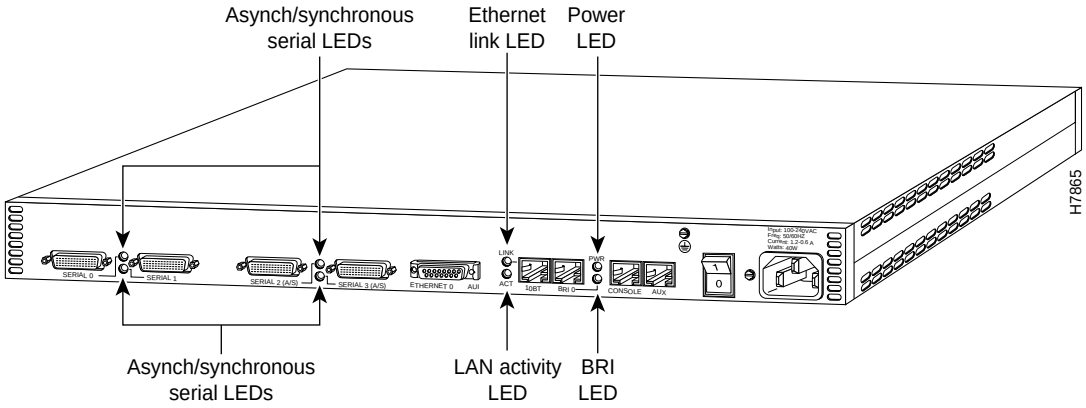
Figure A-1 LED Locations